metalmanufacturing industries

PRIV. DE RIO SANTIAGO #30
COL. LA RAZA
SOLEDAD DE GRACIANO SANCHEZ
SAN LUIS POTOSI, C.P. 78433

'N' SERIES SINGLE DOOR 1/2 LITE - 1/2 LOUVER

"NON-IMPACT" OUTSWING

L.F. SCHMIDT LICENSE No. 43409 STATE OF FLORIDA PROFESSIONAL ENGINEER

Digitally signed by Lyndon F Schmidt
Date: 2023.07.10 14:10:36 -04'00'

This item has been digitally signed and sealed by **L. F. Schmidt, P.E.** on the date adjacent to the seal.

Printed copies of this document are not considered signed and sealed and the signature must be verified on any electronic copies.

THIS PRODUCT APPROVAL IS VALID ONLY FOR THE STATE OF FLORIDA

GENERAL NOTES

1. This product has been evaluated and is in compliance with the 8th Edition (2023) Florida Building Code (FBC) structural requirements excluding the "High Velocity Hurricane Zone" (HVHZ).
2. Product anchors shall be as listed and spaced as shown on details. Anchor embedment to base material shall be beyond wall dressing or stucco.
3. When used in areas requiring wind borne debris protection this product is required to be protected with an impact resistant covering that complies with Section 1609.1.2 of the FBC.
4. The "N" door achieves a Class III stiffness classification per Section 8.2.2 of ANSI A250.13.
5. Site conditions that deviate from the details of this drawing require further engineering analysis by a licensed engineer or registered architect.

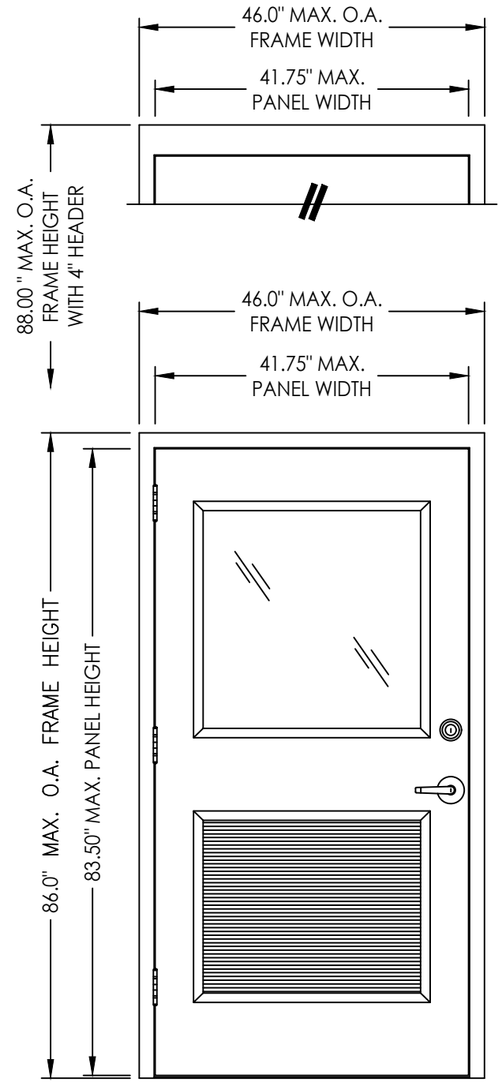

"N " DOOR

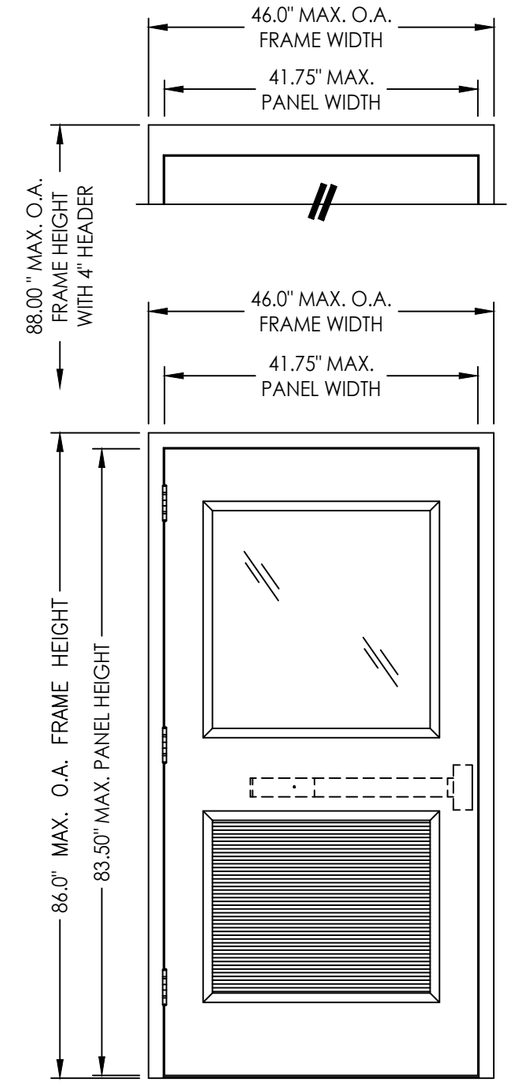

"N" DOOR

TABLE OF CONTENTS

SHEET #	DESCRIPTION
1	Typical elevation, design pressures & general notes
2	Door panel details
3	Horizontal cross sections
4	Horizontal cross sections
5	Horizontal cross sections
6	Vertical cross sections
7	Buck and frame anchoring
8	Anchoring details
9	Components
10	Bill of materials and components

DOOR TYPE	FRAME TYPE	OVERALL FRAME DIMENSION	MAX D.L.O. DIMENSION	GLASS TYPE	LOCK TYPE	DESIGN PRESSURE (PSF)	
						POSITIVE	NEGATIVE
N	2" HEAD	46.0" x 86.0"	29.0" X 29.0"	G1	DESIGN LATCH & DEADBOLT OR VONDUPRIN RIM PANIC HH99EO	+40.0	-40.0
	4" HEAD	46.0" x 88.0"					

Documents Prepared By:
Lyndon F. Schmidt
P.E. No. 43409

RW BUILDING CONSULTANTS, INC.
P.O. Box 230, Valrico, FL 33595
Phone No.: 813.659.9197
FBPE Registry No. 9813

PRODUCT: "N" PANELS "NON-IMPACT" MMI

PART OR ASSEMBLY: TYPICAL ELEVATIONS, DESIGN PRESSURES & GENERAL NOTES

REVISIONS

NO.	DATE		BY
4	7/10/23	UPDATE TO 8TH ED. (2023) FBC	LFS
3	7/30/20	UPDATE TO 7TH ED. (2020) FBC	LFS
2	7/13/17	UPDATE TO 6TH ED. (2017) FBC	LFS
1	10/14/16	UPDATE TO 5TH ED. (2014) FBC	JK

DATE: 02/18/09
SCALE: N.T.S.
DWG. BY: JK
CHK. BY: LFS
DRAWING NO.: FL-12161.4
SHEET 1 OF 10

© 2009 R.W. BUILDING CONSULTANTS INC.

Z:\2023 FBC Drawings\Metal Mfg Industries\FL-12161 R4\FL-12161.1-6.dwg

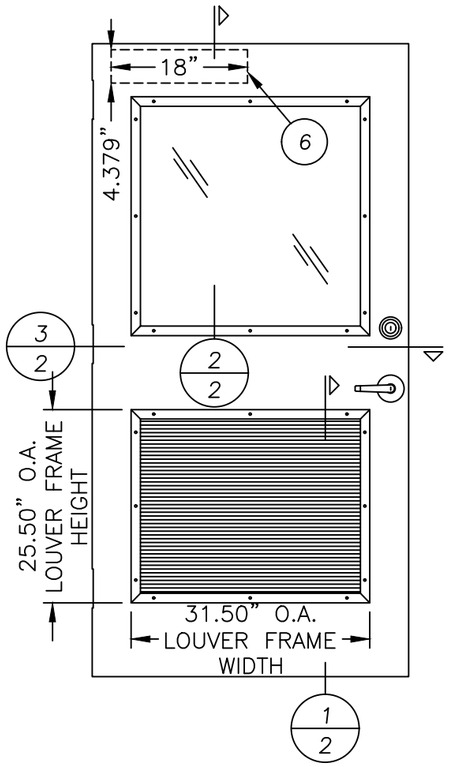

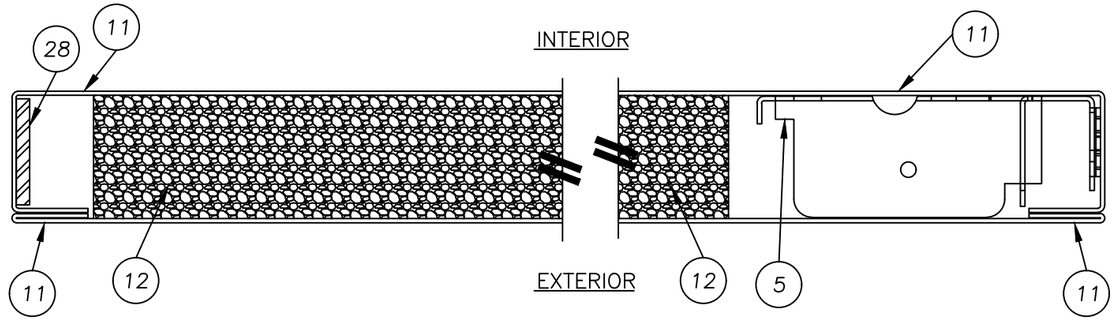

3/2 HORIZONTAL CROSS SECTION

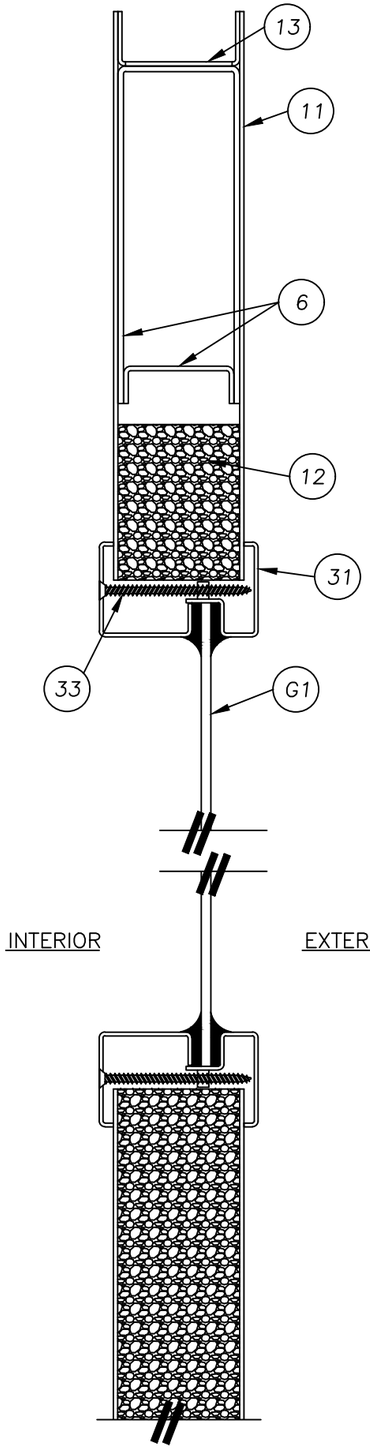

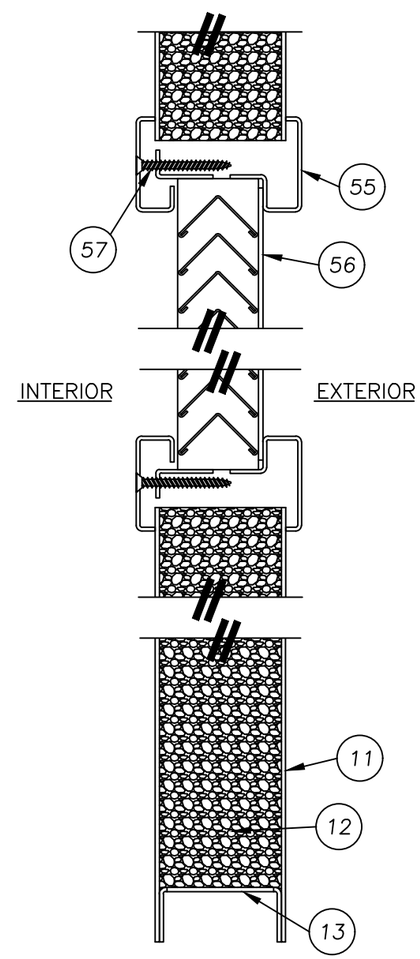

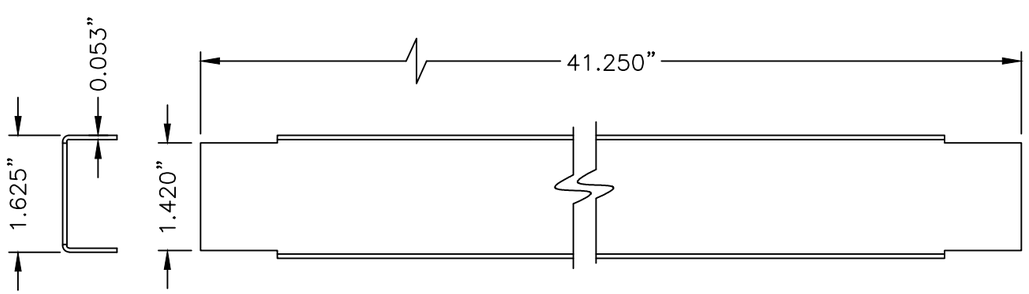

13 DOOR TOP & BOTTOM CLOSER
16GA. (.053) C.R.S.

1/2 VERTICAL CROSS SECTION

2/2 VERTICAL CROSS SECTION

Documents Prepared By:
Lyndon F. Schmidt
P.E. No. 43409

RW BUILDING CONSULTANTS, INC.
P.O. Box 230, Valrico, FL 33595
Phone No.: 813.659.9197
FBPE Registry No. 9813

PRODUCT: MMI "N" PANELS "NON-IMPACT"

PART OR ASSEMBLY: DOOR PANEL DETAILS

NO.	DATE	REVISIONS	BY
4	7/10/23	UPDATE TO 8TH ED. (2023) FBC	LFS
3	7/30/20	UPDATE TO 7TH ED. (2020) FBC	LFS
2	7/13/17	UPDATE TO 6TH ED. (2017) FBC	LFS
1	10/14/16	UPDATE TO 5TH ED. (2014) FBC	JK

DATE: 02/18/09
SCALE: N.T.S.
DWG. BY: JK
CHK. BY: LFS
DRAWING NO.: FL-12161.4
SHEET 2 OF 10

© 2009 R.W. BUILDING CONSULTANTS INC.

Z:\2023 FBC Drawings\Metal Mfg Industries\FL-12161 R4\FL-12161.1-6.dwg

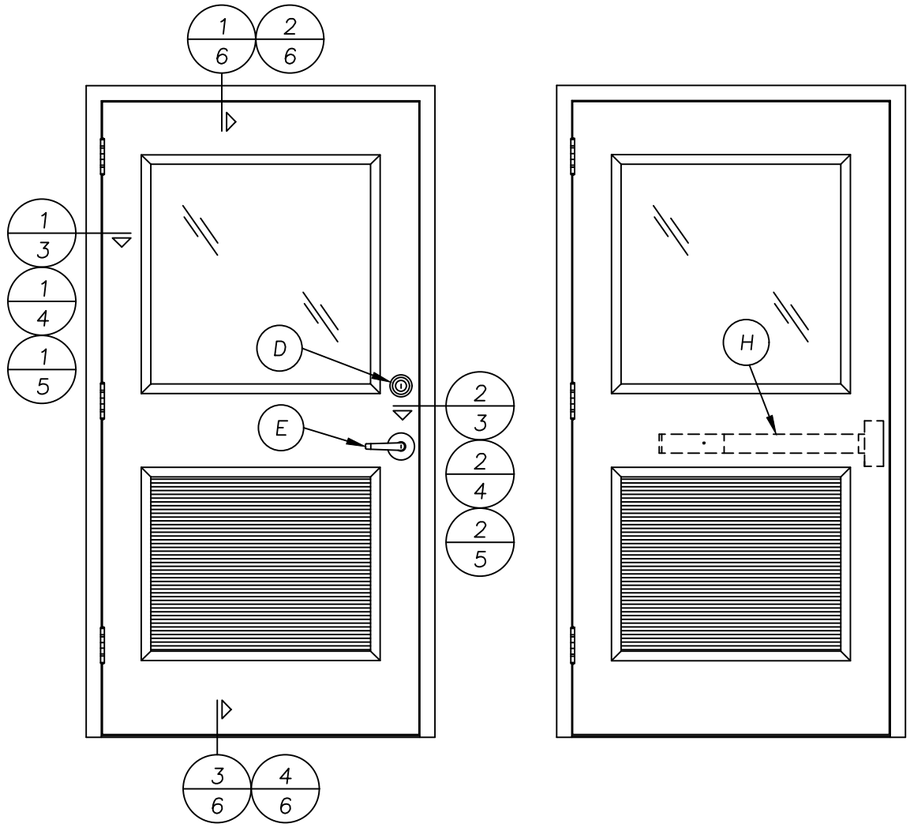

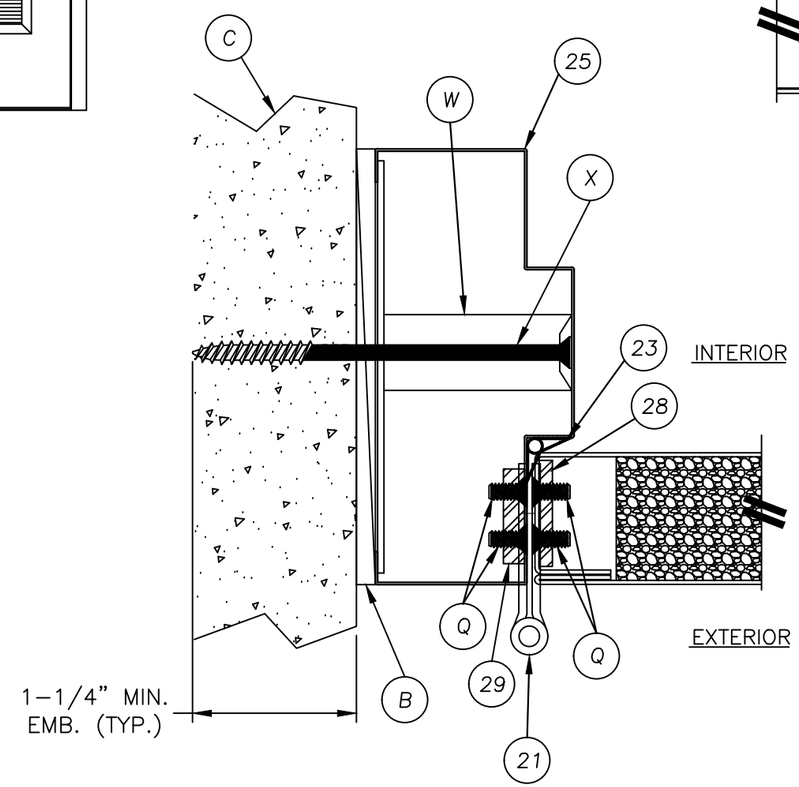

1/3 HORIZONTAL CROSS SECTION
@ HINGE
SHOWN WITH TUBE ANCHOR

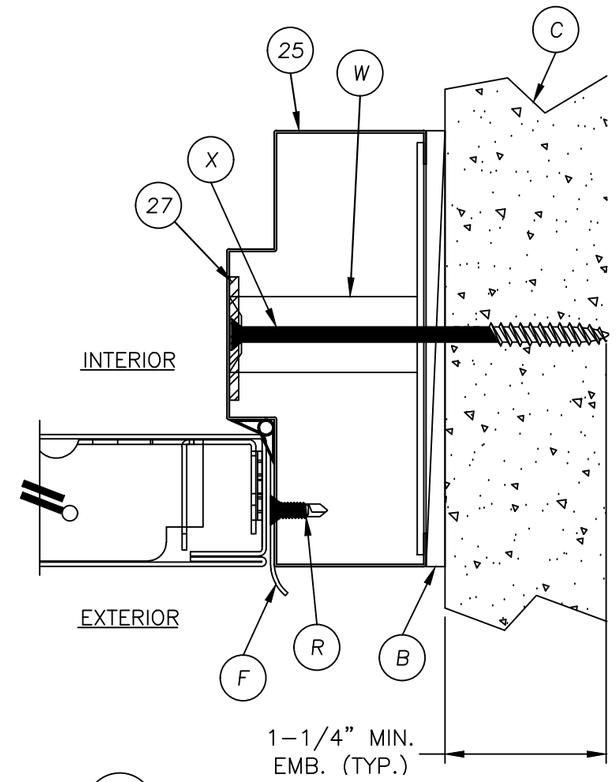

2/3 HORIZONTAL CROSS SECTION
@ HINGE
SHOWN WITH TUBE ANCHOR

Z:\2023 FBC Drawings\Metal Mfg Industries\FL-12161 R4\FL-12161.1-6.dwg

Documents Prepared By:
Lyndon F. Schmidt
P.E. No. 43409
RW BUILDING CONSULTANTS, INC.
P.O. Box 230, Valrico, FL 33595
Phone No.: 813.659.9197
FBPE Registry No. 9813

PRODUCT: MMI "N" PANELS "NON-IMPACT"

PART OR ASSEMBLY: HORIZONTAL CROSS SECTIONS

REVISIONS

NO.	DATE		BY
4	7/10/23	UPDATE TO 8TH ED. (2023) FBC	LFS
3	7/30/20	UPDATE TO 7TH ED. (2020) FBC	LFS
2	7/13/17	UPDATE TO 6TH ED. (2017) FBC	LFS
1	10/14/16	UPDATE TO 5TH ED. (2014) FBC	JK

DATE: 02/18/09
SCALE: N.T.S.
DWG. BY: JK
CHK. BY: LFS
DRAWING NO.: FL-12161.4
SHEET 3 OF 10

© 2009 R.W. BUILDING CONSULTANTS INC.

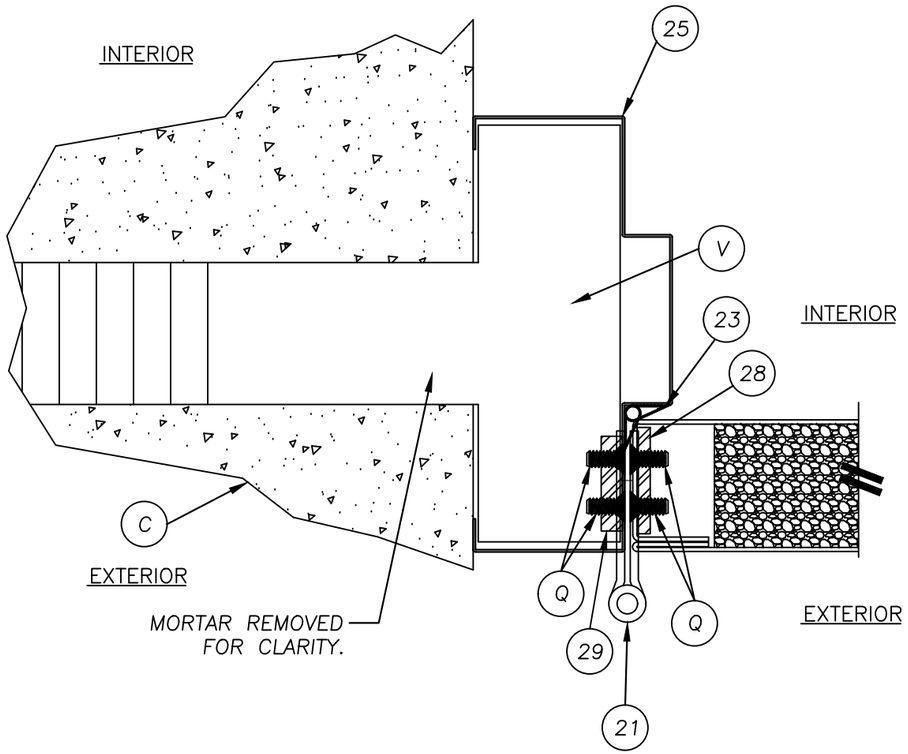

1/4 HORIZONTAL CROSS SECTION @ LATCH SHOWN WITH TEE ANCHOR

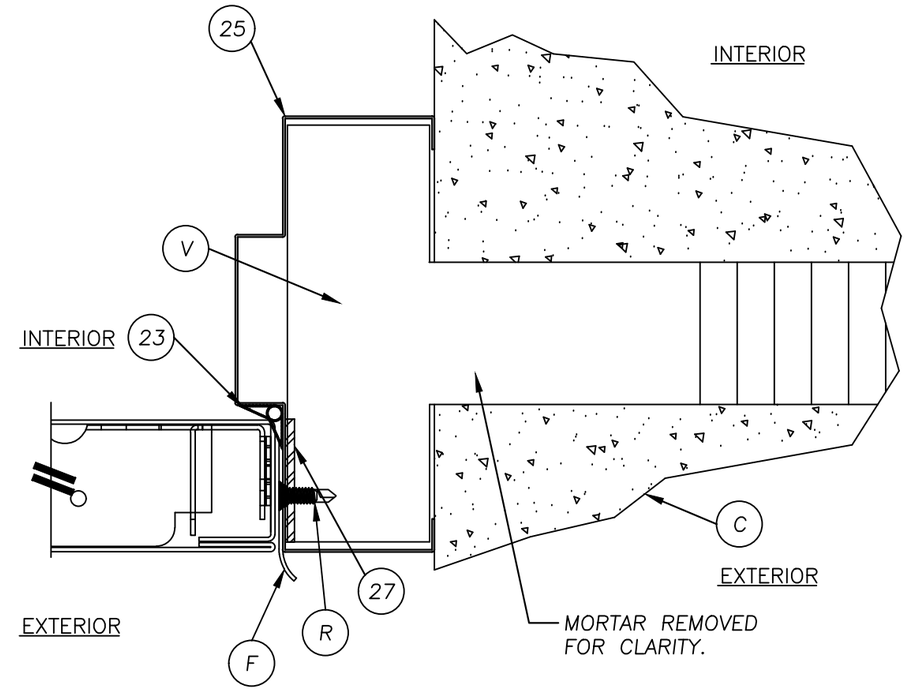

2/4 HORIZONTAL CROSS SECTION @ LATCH SHOWN WITH TEE ANCHOR

Z:\2023 FBC Drawings\Metal Mfg Industries\FL-12161 R4\FL-12161.1-6.dwg

Documents Prepared By:
Lyndon F. Schmidt
P.E. No. 43409

RW BUILDING CONSULTANTS, INC.
P.O. Box 230, Valrico, FL 33595
Phone No.: 813.659.9197
FBPE Registry No. 9813

PRODUCT: MMI "N" PANELS "NON-IMPACT"

PART OR ASSEMBLY: HORIZONTAL CROSS SECTIONS

REVISIONS

NO.	DATE		BY
4	7/10/23	UPDATE TO 8TH ED. (2023) FBC	LFS
3	7/30/20	UPDATE TO 7TH ED. (2020) FBC	LFS
2	7/13/17	UPDATE TO 6TH ED. (2017) FBC	LFS
1	10/14/16	UPDATE TO 5TH ED. (2014) FBC	JK

DATE: 02/18/09
SCALE: N.T.S.
DWG. BY: JK
CHK. BY: LFS
DRAWING NO.: FL-12161.4
SHEET 4 OF 10

© 2009 R.W. BUILDING CONSULTANTS INC.

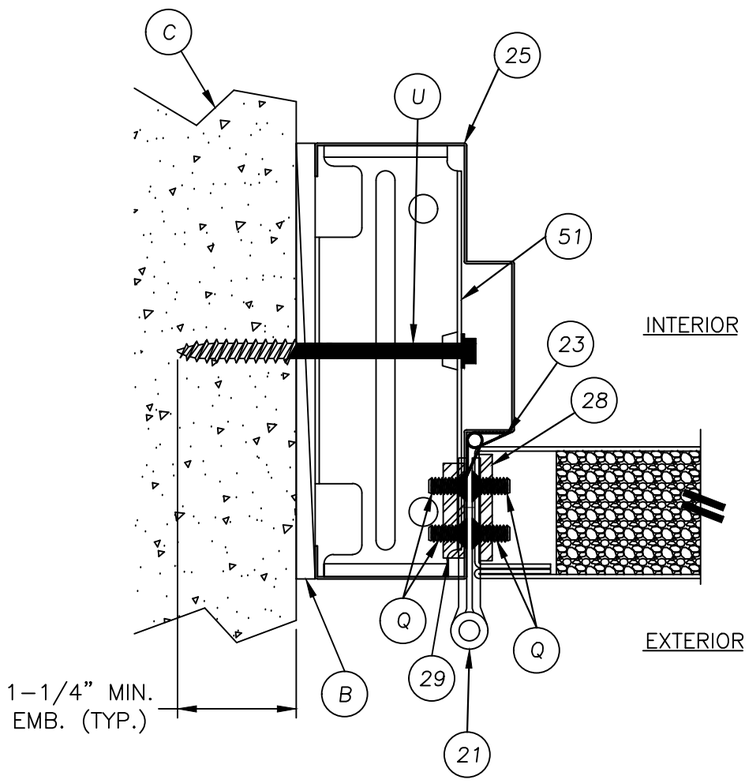

1/5 HORIZONTAL CROSS SECTION @ LATCH
SHOWN WITH UNIVERSAL ANCHOR

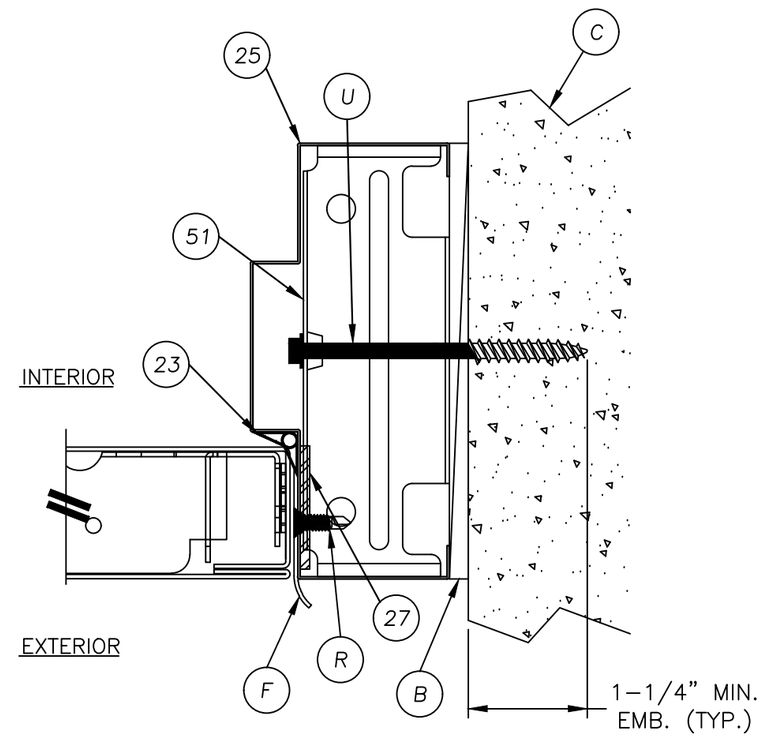

2/5 HORIZONTAL CROSS SECTION @ LATCH
SHOWN WITH UNIVERSAL ANCHOR

Documents Prepared By:
Lyndon F. Schmidt
P.E. No. 43409

RW BUILDING CONSULTANTS, INC.
P.O. Box 230, Valrico, FL 33595
Phone No.: 813.659.9197
FBPE Registry No. 9813

PRODUCT: MMI "N" PANELS "NON-IMPACT"

PART OR ASSEMBLY: HORIZONTAL CROSS SECTIONS

REVISIONS

NO.	DATE		BY
4	7/10/23	UPDATE TO 8TH ED. (2023) FBC	LFS
3	7/30/20	UPDATE TO 7TH ED. (2020) FBC	LFS
2	7/13/17	UPDATE TO 6TH ED. (2017) FBC	LFS
1	10/14/16	UPDATE TO 5TH ED. (2014) FBC	JK

DATE: 02/18/09
SCALE: N.T.S.
DWG. BY: JK
CHK. BY: LFS
DRAWING NO.: FL-12161.4
SHEET 5 OF 10

© 2009 R.W. BUILDING CONSULTANTS INC.

Z:\2023 FBC Drawings\Metal Mfg Industries\FL-12161 R4\FL-12161.1-6.dwg

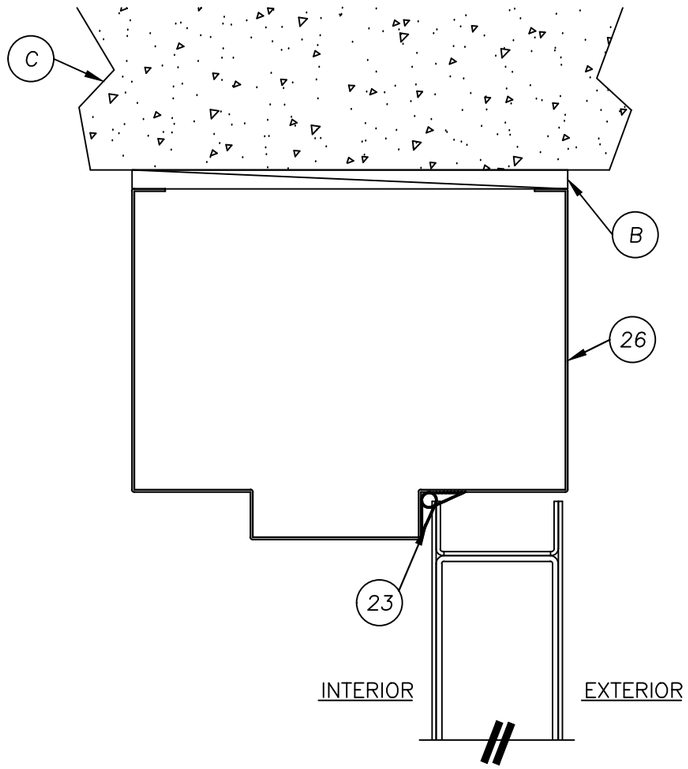

1/6 VERTICAL CROSS SECTION @ HEAD

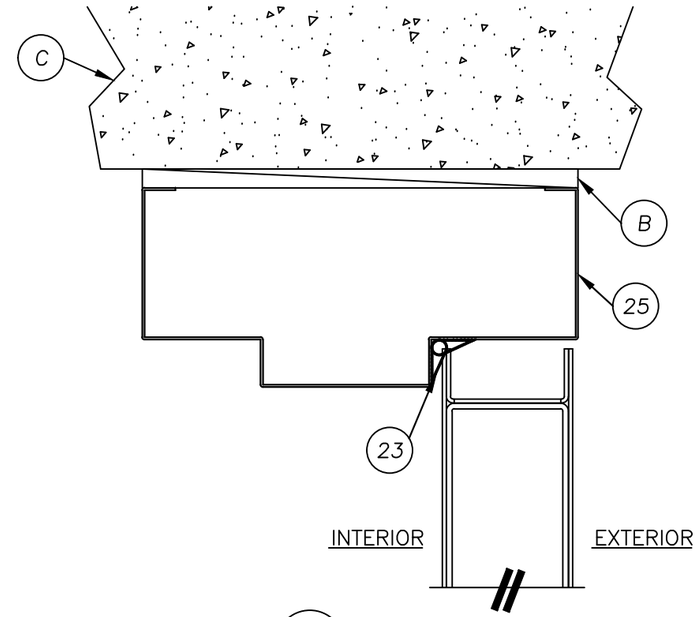

2/6 VERTICAL CROSS SECTION @ HEAD

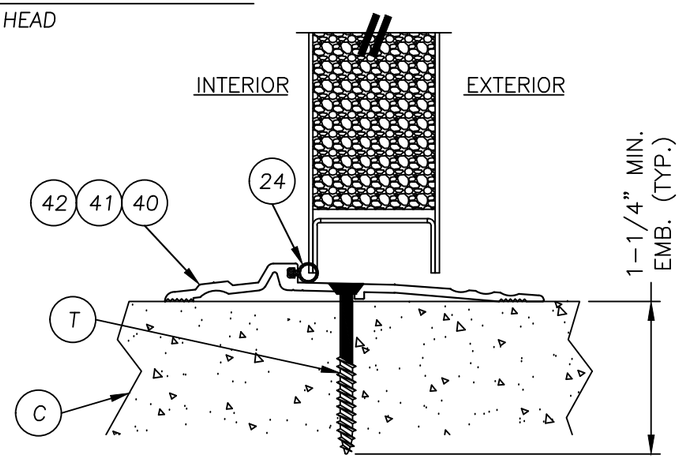

3/6 VERTICAL CROSS SECTION @ THRESHOLD

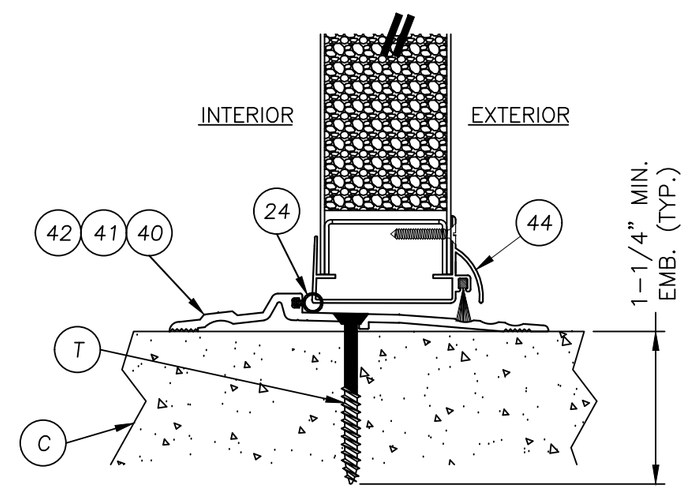

4/6 VERTICAL CROSS SECTION @ THRESHOLD

Documents Prepared By:
Lyndon F. Schmidt
P.E. No. 43409

RW BUILDING CONSULTANTS, INC.
P.O. Box 230, Valrico, FL 33595
Phone No.: 813.659.9197
FBPE Registry No. 9813

PRODUCT: MMI "N" PANELS "NON-IMPACT"

PART OR ASSEMBLY: VERTICAL CROSS SECTIONS

NO.	DATE	REVISIONS	BY
4	7/10/23	UPDATE TO 8TH ED. (2023) FBC	LFS
3	7/30/20	UPDATE TO 7TH ED. (2020) FBC	LFS
2	7/13/17	UPDATE TO 6TH ED. (2017) FBC	LFS
1	10/14/16	UPDATE TO 5TH ED. (2014) FBC	JK

DATE: 02/18/09
SCALE: N.T.S.
DWG. BY: JK
CHK. BY: LFS
DRAWING NO.: FL-12161.4
SHEET 6 OF 10

© 2009 R.W. BUILDING CONSULTANTS INC.

Z:\2023 FBC Drawings\Metal Mfg Industries\FL-12161 R4\FL-12161.1-6.dwg

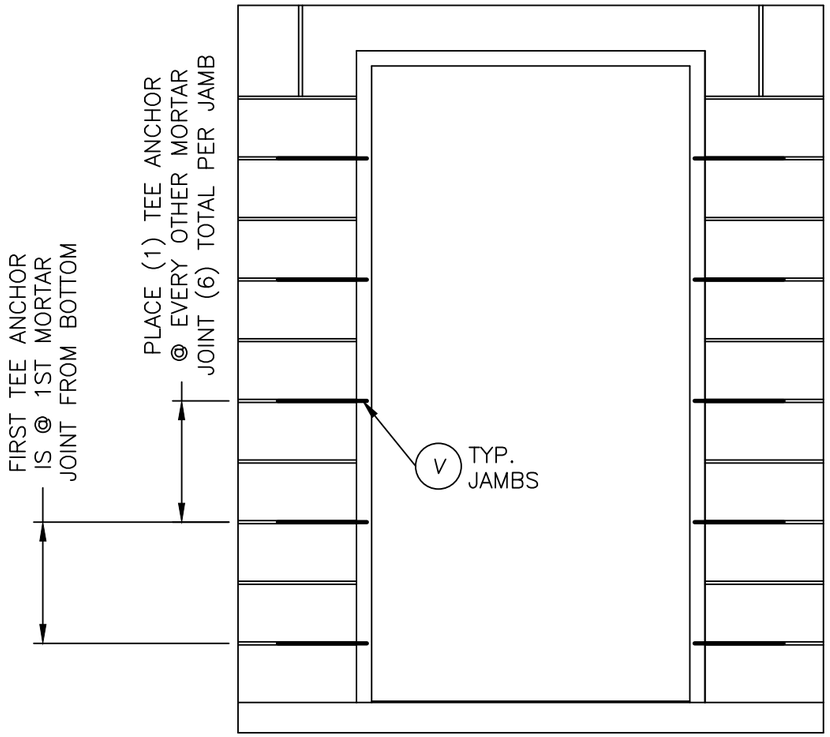

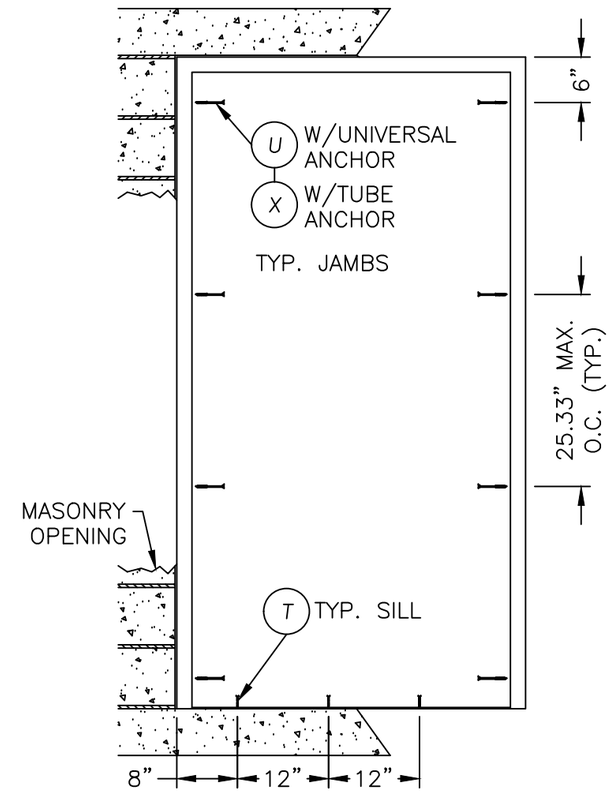

CONCRETE ANCHOR NOTES:

1. *Concrete anchor locations at the corners may be adjusted to maintain the min. edge distance to mortar joints.*
2. *Concrete anchor locations noted as "MAX. ON CENTER" must be adjusted to maintain the min. edge distance to mortar joints, additional concrete anchors may be required to ensure the "MAX. ON CENTER" dimension are not exceeded.*
3. *Concrete anchor table:*

ANCHOR TYPE	ANCHOR SIZE	MIN. EMBEDMENT	MIN. CLEARANCE TO MASONRY EDGE	MIN. CLEARANCE TO ADJACENT ANCHOR
ITW TAPCON®	1/4"	1-1/4"	2-1/2"	4"
DeWALT ULTRACON®	1/4"	1-1/4"	2-1/2"	4"
DeWALT ULTRACON®	5/16"	1-1/4"	3-1/8"	5"

Documents Prepared By:
Lyndon F. Schmidt
P.E. No. 43409
RW BUILDING CONSULTANTS, INC.
P.O. Box 230, Valrico, FL 33595
Phone No.: 813.659.9197
FBPE Registry No. 9813

PRODUCT: *MMI "N" PANELS "NON-IMPACT"*

PART OR ASSEMBLY: *BUCK AND FRAME ANCHORING*

REVISIONS

NO.	DATE		BY
4	7/10/23	UPDATE TO 8TH ED. (2023) FBC	LFS
3	7/30/20	UPDATE TO 7TH ED. (2020) FBC	LFS
2	7/13/17	UPDATE TO 6TH ED. (2017) FBC	LFS
1	10/14/16	UPDATE TO 5TH ED. (2014) FBC	JK

DATE: 02/18/09
SCALE: N.T.S.
DWG. BY: JK
CHK. BY: LFS
DRAWING NO.: FL-12161.4
SHEET 7 OF 10

© 2009 R.W. BUILDING CONSULTANTS INC.

Z:\2023 FBC Drawings\Metal Mfg Industries\FL-12161 R4\FL-12161.1-6.dwg

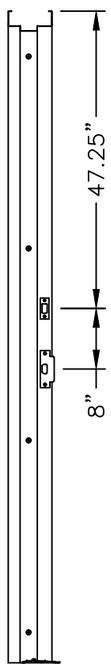

STRIKE PLATE
LOCATIONS 2" HEAD

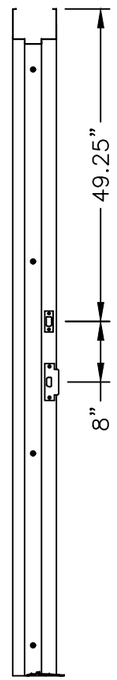

STRIKE PLATE
LOCATIONS 4" HEAD

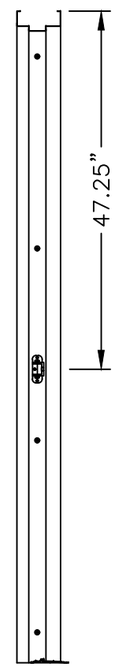

STRIKE PLATE
LOCATION 2" HEAD

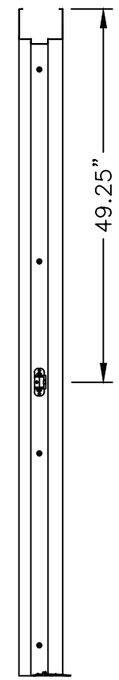

STRIKE PLATE
LOCATION 4" HEAD

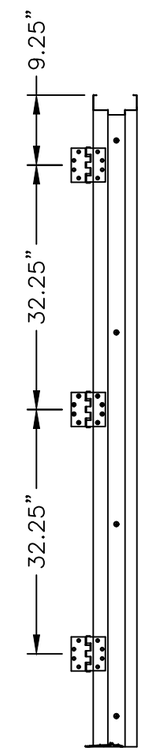

HINGE LOCATIONS
2" HEAD

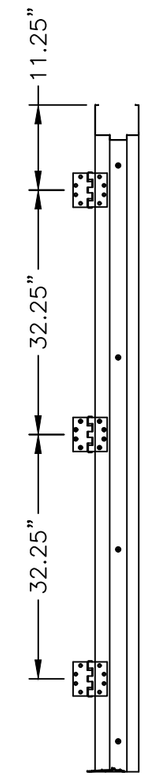

HINGE LOCATIONS
4" HEAD

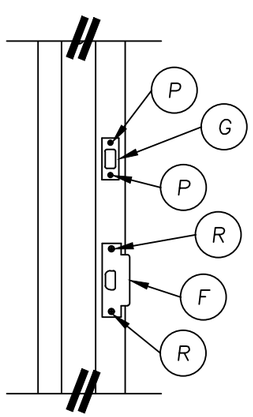

STRIKE PLATE DETAIL
ANSI STRIKE & DEADBOLT

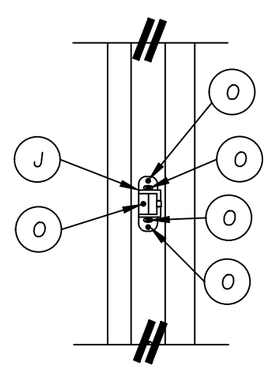

RIM STRIKE DETAIL

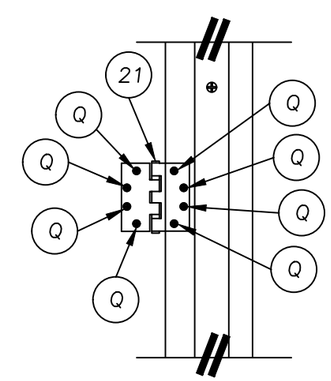

HINGE DETAIL

Documents Prepared By:
Lyndon F. Schmidt
P.E. No. 43409

RW BUILDING CONSULTANTS, INC.
P.O. Box 230, Valrico, FL 33595
Phone No.: 813.659.9197
FBPE Registry No. 9813

PRODUCT: MMI "N" PANELS "NON-IMPACT"

PART OR ASSEMBLY: ANCHORING DETAILS

REVISIONS

NO.	DATE		BY
4	7/10/23	UPDATE TO 8TH ED. (2023) FBC	LFS
3	7/30/20	UPDATE TO 7TH ED. (2020) FBC	LFS
2	7/13/17	UPDATE TO 6TH ED. (2017) FBC	LFS
1	10/14/16	UPDATE TO 5TH ED. (2014) FBC	JK

DATE: 02/18/09
SCALE: N.T.S.
DWG. BY: JK
CHK. BY: LFS
DRAWING NO.: FL-12161.4
SHEET 8 OF 10

© 2009 R.W. BUILDING CONSULTANTS INC.

Z:\2023 FBC Drawings\Metal Mfg Industries\FL-12161 R4\FL-12161.1-6.dwg

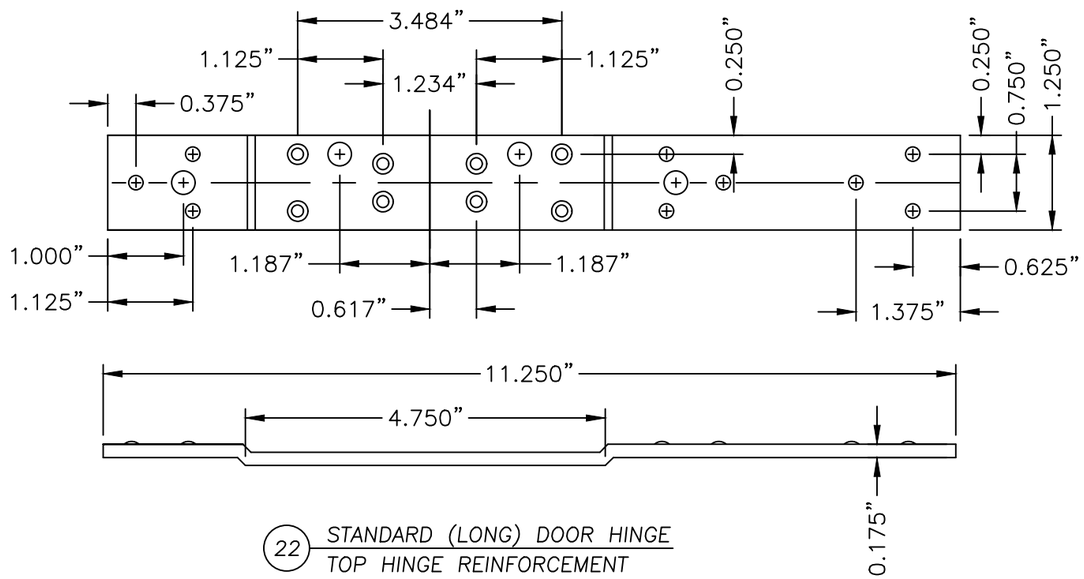

22 STANDARD (LONG) DOOR HINGE
TOP HINGE REINFORCEMENT

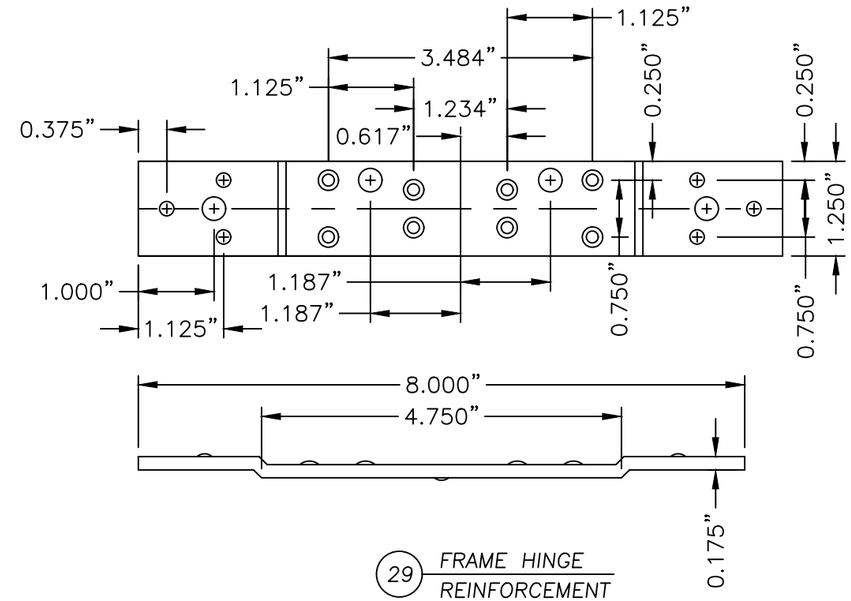

29 FRAME HINGE
REINFORCEMENT

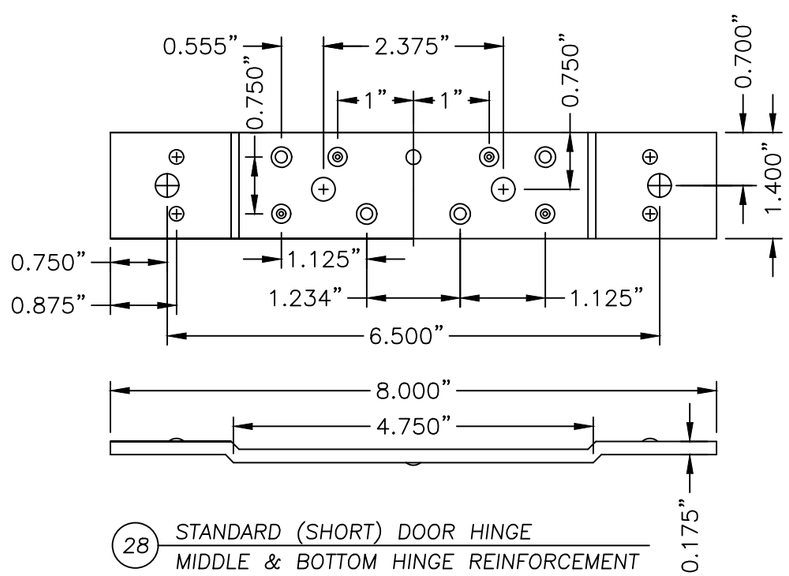

28 STANDARD (SHORT) DOOR HINGE
MIDDLE & BOTTOM HINGE REINFORCEMENT

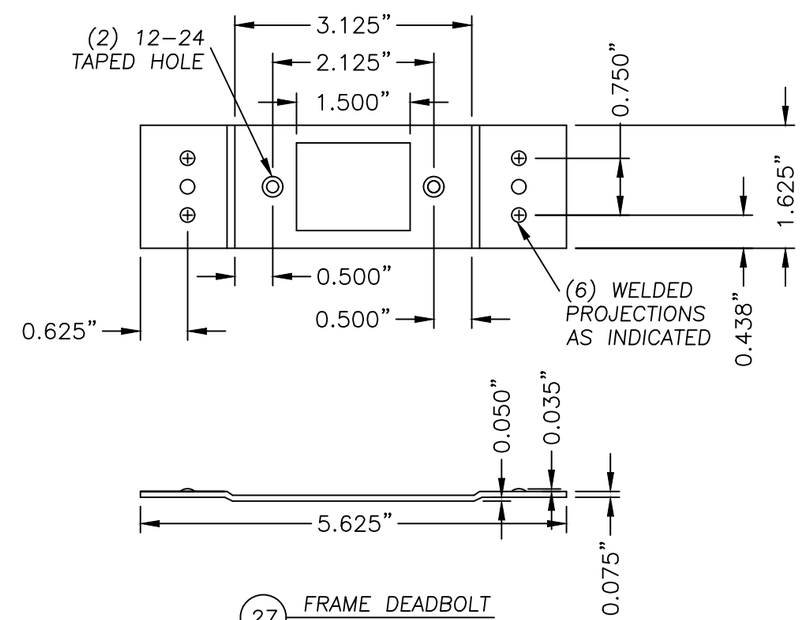

27 FRAME DEADBOLT
REINFORCEMENT

Z:\2023 FBC Drawings\Metal Mfg Industries\FL-12161 R4\FL-12161.1-6.dwg

Documents Prepared By:
Lyndon F. Schmidt
P.E. No. 43409
RW BUILDING CONSULTANTS, INC.
P.O. Box 230, Valrico, FL 33595
Phone No.: 813.659.9197
FBPE Registry No. 9813

PRODUCT: MMI "N" PANELS "NON-IMPACT"

PART OR ASSEMBLY: COMPONENTS

REVISIONS

NO.	DATE	BY
4	7/10/23	LFS
3	7/30/20	LFS
2	7/13/17	LFS
1	10/14/16	JK

UPDATE TO 8TH ED. (2023) FBC
UPDATE TO 7TH ED. (2020) FBC
UPDATE TO 6TH ED. (2017) FBC
UPDATE TO 5TH ED. (2014) FBC

DATE: 02/18/09
SCALE: N.T.S.
DWG. BY: JK
CHK. BY: LFS
DRAWING NO.: FL-12161.4
SHEET 9 OF 10

© 2009 R.W. BUILDING CONSULTANTS INC.

BILL OF MATERIALS		
ITEM	DESCRIPTION	MATERIAL
B	1/4" MAX. SHIM SPACE	WOOD
C	3,000 PSI MIN. CONCRETE CONFORMING TO ACI 301 OR HOLLOW BLOCK CONFORMING TO ASTM C90	CONCRETE
D	DESIGN HARDWARE D25 DEADBOLT	STEEL
E	DESIGN HARDWARE X82 LATCH (161 PREP)	STEEL
F	LATCH STRIKE PLATE	BRASS
G	DEADBOLT STRIKE PLATE	STEEL
H	VON DUPRIN 99 SERIES PANIC HARDWARE	STEEL
J	RIM PANIC STRIKE PLATE	STEEL
O	#12 X 1" H.H. SELF TAPPING SCREW	STEEL
P	#8 X 3/4" PFH SCREW	STEEL
Q	#12 X 1/2" MACHINE SCREW	STEEL
R	#12 X 3/4" PFH SELF TAPPING MACHINE SCREW	STEEL
T	1/4" X 2-1/4" PFH DeWALT OR ITW CONCRETE SCREW	STEEL
U	5/16" X 3-3/4" HWH DeWALT CONCRETE SCREW	STEEL
V	MASONRY 'TEE' ANCHOR (PFMT5)	STEEL
W	TUBE ANCHOR	STEEL
X	5/16" X 5" PFH DeWALT CONCRETE SCREW	STEEL
5	LOCK BOX REINFORCEMENT	STEEL
6	CLOSER REINFORCEMENT	STEEL
11	DOOR SKIN (.055" THK. STEEL, Fy=40,300 PSI MIN) (N DOOR)	STEEL
12	FOAM (N DOOR) 1.0 PCF MIN. DENSITY	POLYSTYRENE
13	DOOR TOP & BOTTOM CLOSER (N DOOR)	STEEL
21	HINGE	STEEL
22	STD. (LONG) DOOR HINGE REIN. (TOP HINGE PDNLHR 450)	STEEL
23	WEATHERSTRIP	FOAM
24	THRESHOLD WEATHERSTRIP (NATIONAL GUARD PRODUCTS, INC. ITEM #33)	VINYL
25	FRAME 5-3/4" MIN. WITH 2" HEAD	STEEL
26	FRAME 5-3/4" MIN. WITH 4" HEAD	STEEL
27	14GA. (.075") C.R.S. 161 DEADBOLT FRAME REINFORCEMENT (PFDBR4)	STEEL
28	STD. (SHORT) DOOR HINGE REIN. (MIDDLE & BOTTOM) PDNHR450)	STEEL
29	STD. 4-1/2" FRAME HINGE REINFORCEMENT 7GA.(.175" PF4HR)	STEEL
31	LITE FRAME	STEEL
33	#6 X 2" PFH SCREW	STEEL
34	TREMCO SPECTREM II GLAZING COMPOUND	SILICONE
40	OUTSWING THRESHOLD NATIONAL GUARD PRODUCTS, INC. #896	ALUMINUM
41	OUTSWING THRESHOLD NATIONAL GUARD PRODUCTS, INC. #950	ALUMINUM
42	OUTSWING THRESHOLD PEMKO #2005 V	ALUMINUM
44	95WHA DOOR SWEEP NATIONAL GUARD PRODUCTS, INC.	ALUMINUM
51	FRAME REINFORCEMENT	STEEL
55	LOUVER FRAME	STEEL
56	LOUVER PANEL	STEEL
57	#6 X 1-1/4" PFH SCREW	STEEL

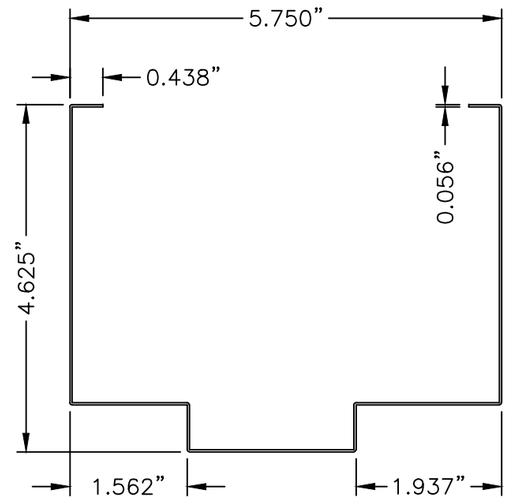

26 FRAME

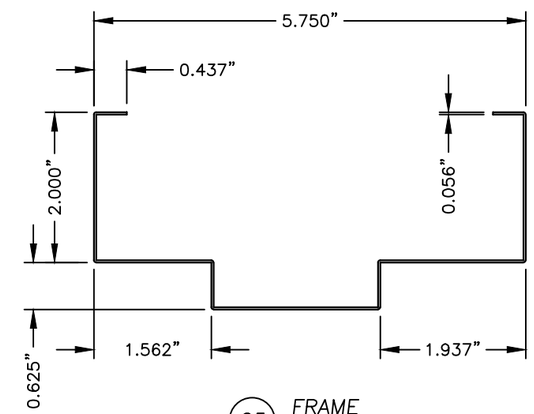

25 FRAME

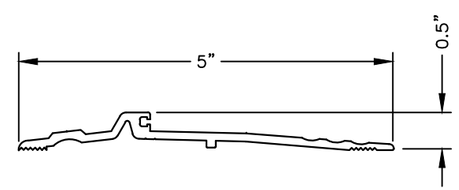

40 THRESHOLD

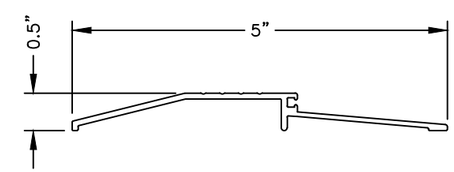

41 THRESHOLD

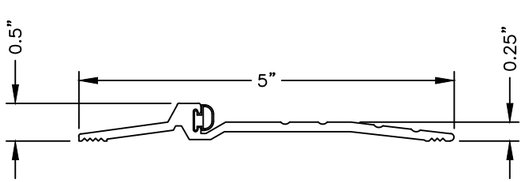

42 THRESHOLD

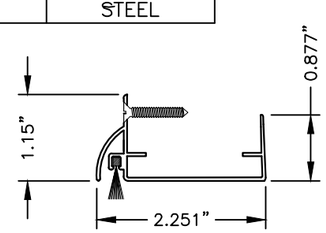

44 SWEEP

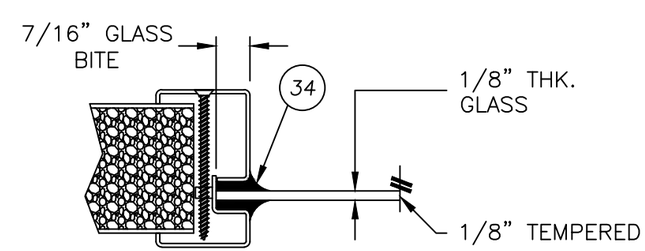

G1 GLAZING DETAIL
9/16" MONOLITHIC GLASS

Documents Prepared By:
Lyndon F. Schmidt
P.E. No. 43409

RW BUILDING CONSULTANTS, INC.
P.O. Box 230, Valrico, FL 33595
Phone No.: 813.659.9197
FBPE Registry No. 9813

PRODUCT: "N" PANELS "NON-IMPACT" MMI

PART OR ASSEMBLY: BILL OF MATERIALS, GLAZING DETAIL & COMPONENTS

REVISIONS

NO.	DATE		BY
4	7/10/23	UPDATE TO 8TH ED. (2023) FBC	LFS
3	7/30/20	UPDATE TO 7TH ED. (2020) FBC	LFS
2	7/13/17	UPDATE TO 6TH ED. (2017) FBC	LFS
1	10/14/16	UPDATE TO 5TH ED. (2014) FBC	JK

DATE: 02/18/09
SCALE: N.T.S.
DWG. BY: JK
CHK. BY: LFS
DRAWING NO.: FL-12161.4
SHEET 10 OF 10

© 2009 R.W. BUILDING CONSULTANTS INC.

Z:\2023 FBC Drawings\Metal Mfg Industries\FL-12161 R4\FL-12161.1-6.dwg